KISOL
— FIBERGLASS POOLS —

MEDITERRÂNEA SPA

KS 600

4300 GALLONS

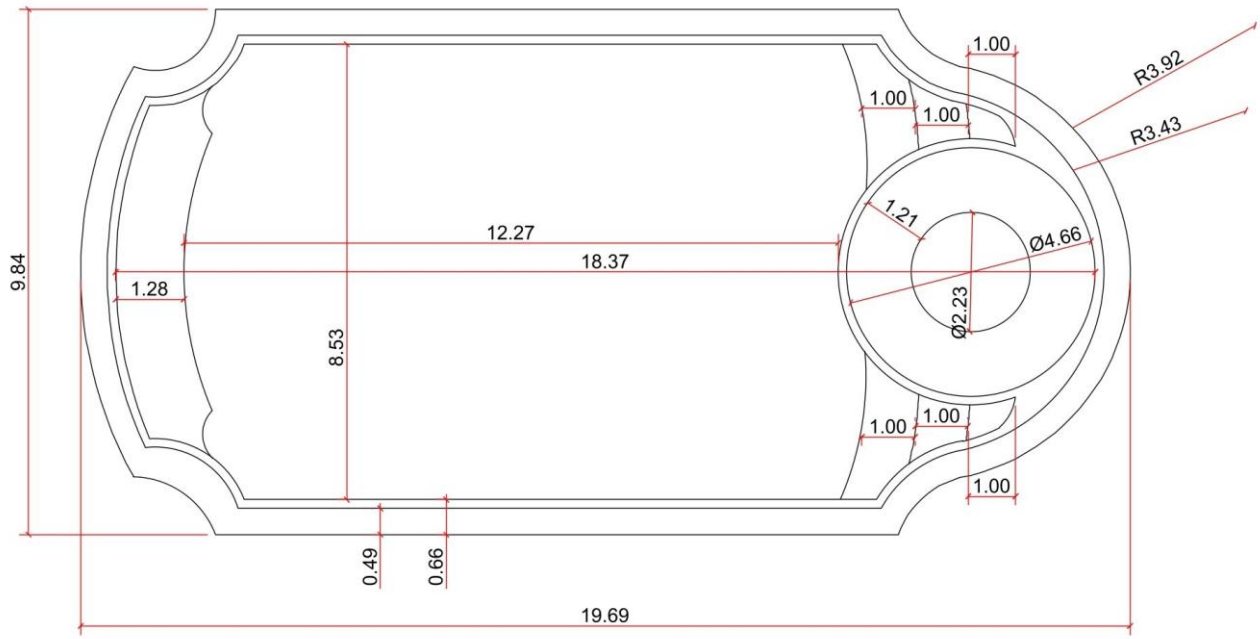

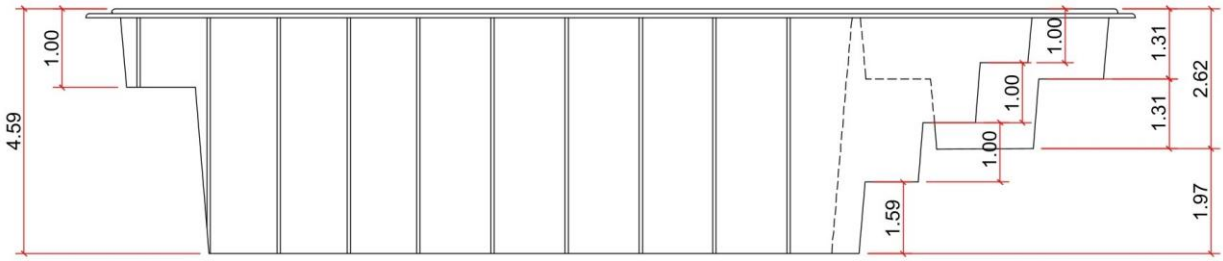

All illustrations have approximate internal and external measurements, expressed in feet.
Approximate volumes, illustrations are not to scale.